Optima XE-90 Ultracentrifuge

BECKMAN COULTER
We're better together

Customer FiRST 2011

課程大綱

1. Instrument Introduction 儀器簡介
2. Instrument Operation 儀器操作
3. Rotor and Tubes Operation 轉子與離心管
4. Balance 平衡
5. Maintenance 日常保養

儀器規格

- 最大轉速: 90,000RPM
- 時間: 999hrs 59min or Hold
- 溫度: 0~40℃

開關

We're better together

Customer FiRST 2011

DOOR OPEN/CLOSE

BECKMAN COULTER
We're better together

Customer FiRST 2011

Figure 1-2. The Rotor Chamber

操作面板

轉速設定

時間設定

溫度設定

真空啟動/停止

加速率設定

煞車率設定

Set Speed / Rotor

Rotor and Labware

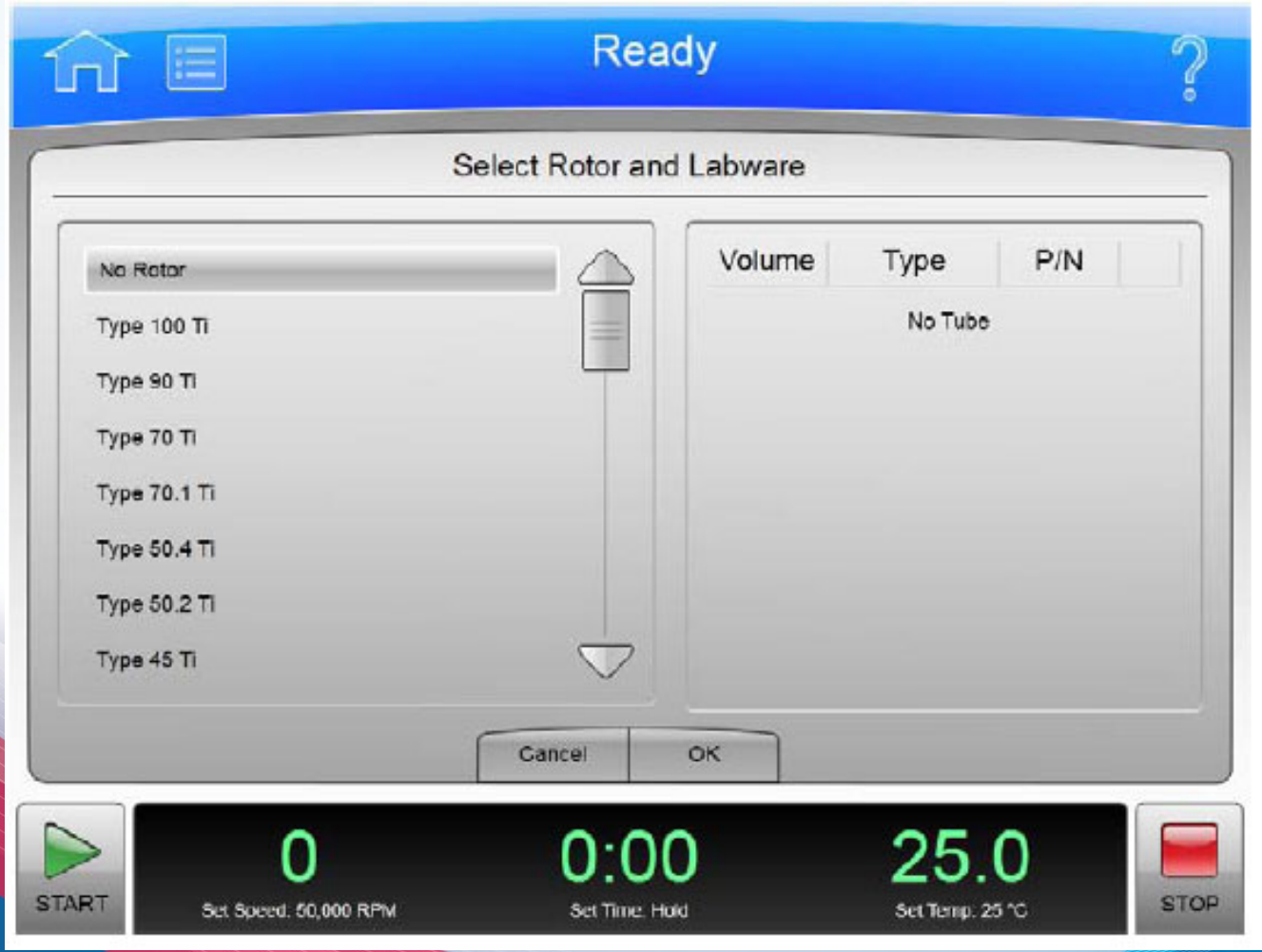

Set Time

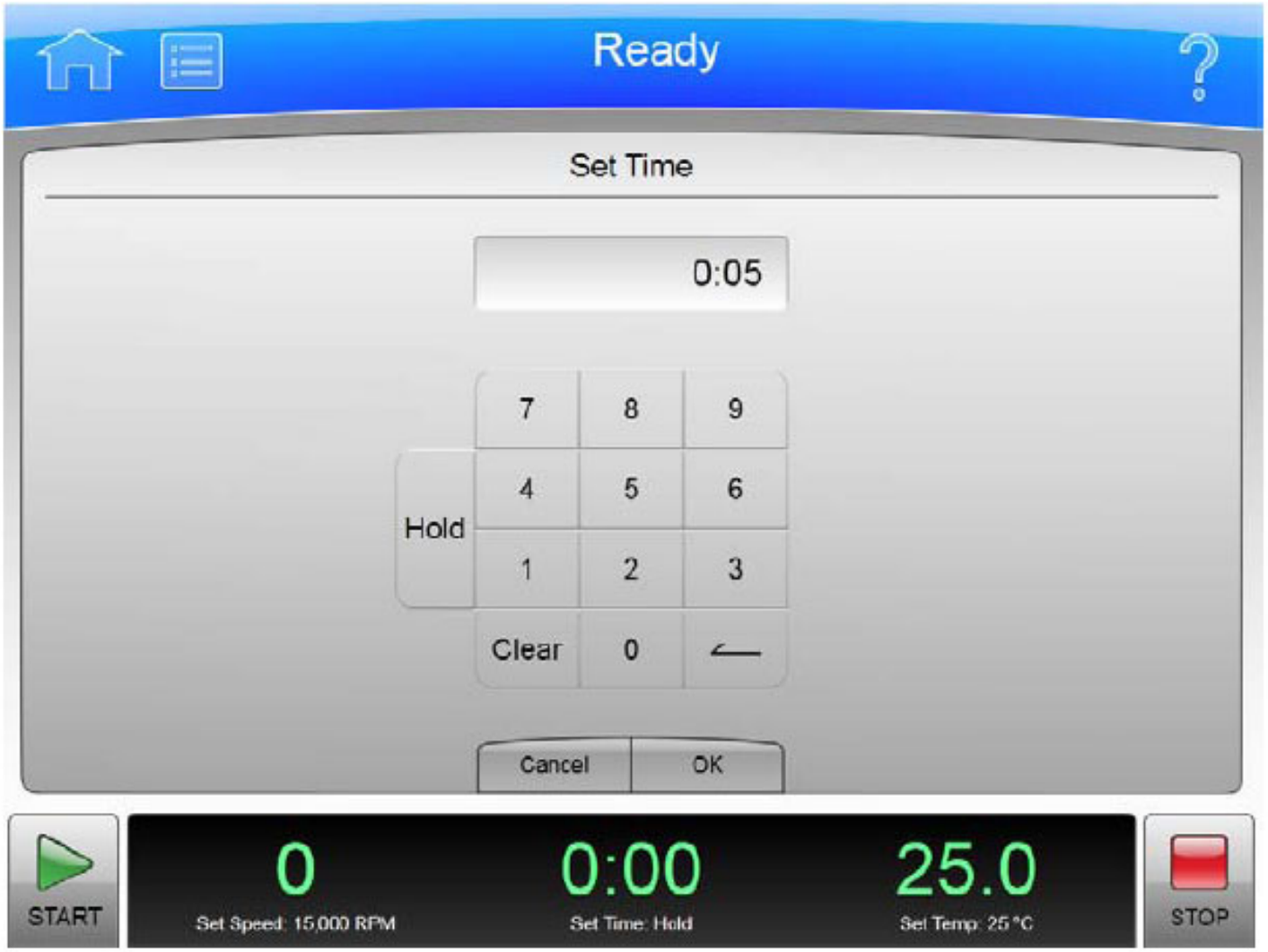

Set Temperature

Set Accel / Decel

Acceleration			Deceleration		
Profile #	Time	RPM	Profile #	Time	RPM
0 (Max)	0:00	0	0 (Max)	0:00	0
1	2:00	170	1	2:00	170
2	2:40	350	2	2:40	350
3	3:00	500	3	3:00	500
4	3:00	170	4	3:00	170
5	4:00	350	5	4:00	350
6	4:30	500	6	4:30	500
7	4:00	170	7	4:00	170
8	5:20	350	8	5:20	350
9	6:00	500	9	6:00	500
			10	Coast	

操作程序
operation procedure

- 打開電源開關。
- 樣品先平衡且對稱置入ROTOR 。
- 用手鎖緊ROTOR蓋子，將ROTOR 垂直置於離心槽內。
- 關上門，按【真空啟動】鍵，機器開始抽真空
- 輸入所需要的參數：
- 轉子：按【Set Speed】鍵, 再按 【Select rotor】
- 轉速：按【Set Speed】鍵，再以數字鍵輸入所要的速度。
- 時間：按【Set Time】鍵，再以數字鍵輸入所要的時間。
- 溫度：按【Set Temp】鍵，再以數字鍵輸入所要的溫度。
- 加速率【Accel】：0 to 9。
- 減速率【Decel】：0 to 10。

- 按【START】鍵，機器開始運轉且時間開始計時，並加速至3000轉。

  等待**真空降到750 μ**以下，離心機才開始加速至所設定之轉速，請務必等待轉速到達設定值後再離開。

- 等待所設定的時間參數計數到0或者要中止運轉按下【STOP】鍵，當ROTOR停止後**按下【VACUUM】鍵，讓真空釋放**。打開門及拿出ROTOR。

Pre-Cooling / Heat
預冷/預熱

- 儀器離心槽 預冷 / 預熱
  - 設定所需溫度並關上門板，啟動真空鍵 <至少二十分鐘以上>

- 轉子預冷 / 預熱
  - 預冷:放置於冷房或4°C冰箱<至少兩小時以上>
  - 預熱:放置所需溫度環境<至少兩小時以上>

以上儀器簡介，開放問題提問

Rotor and Tubes

- 樣品容量與所需轉速（RPM ＆ RCF)
- 選擇合適轉子（ROTOR）
- 選擇離心管 材質/類型/配件
  - Adapters/Spacers/Caps

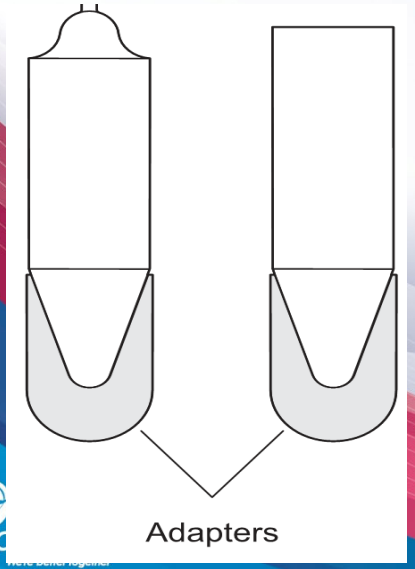

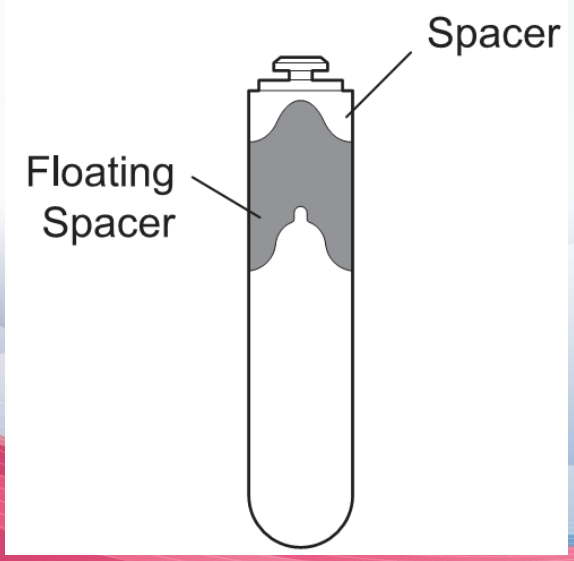

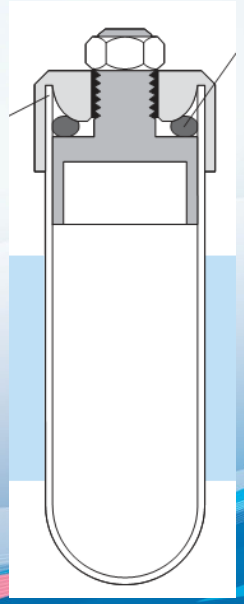

Rotor Type

Fixed Angle Rotor

Swinging Bucket Rotor

Vertical Tube Rotor

Near Vertical Tube Rotor

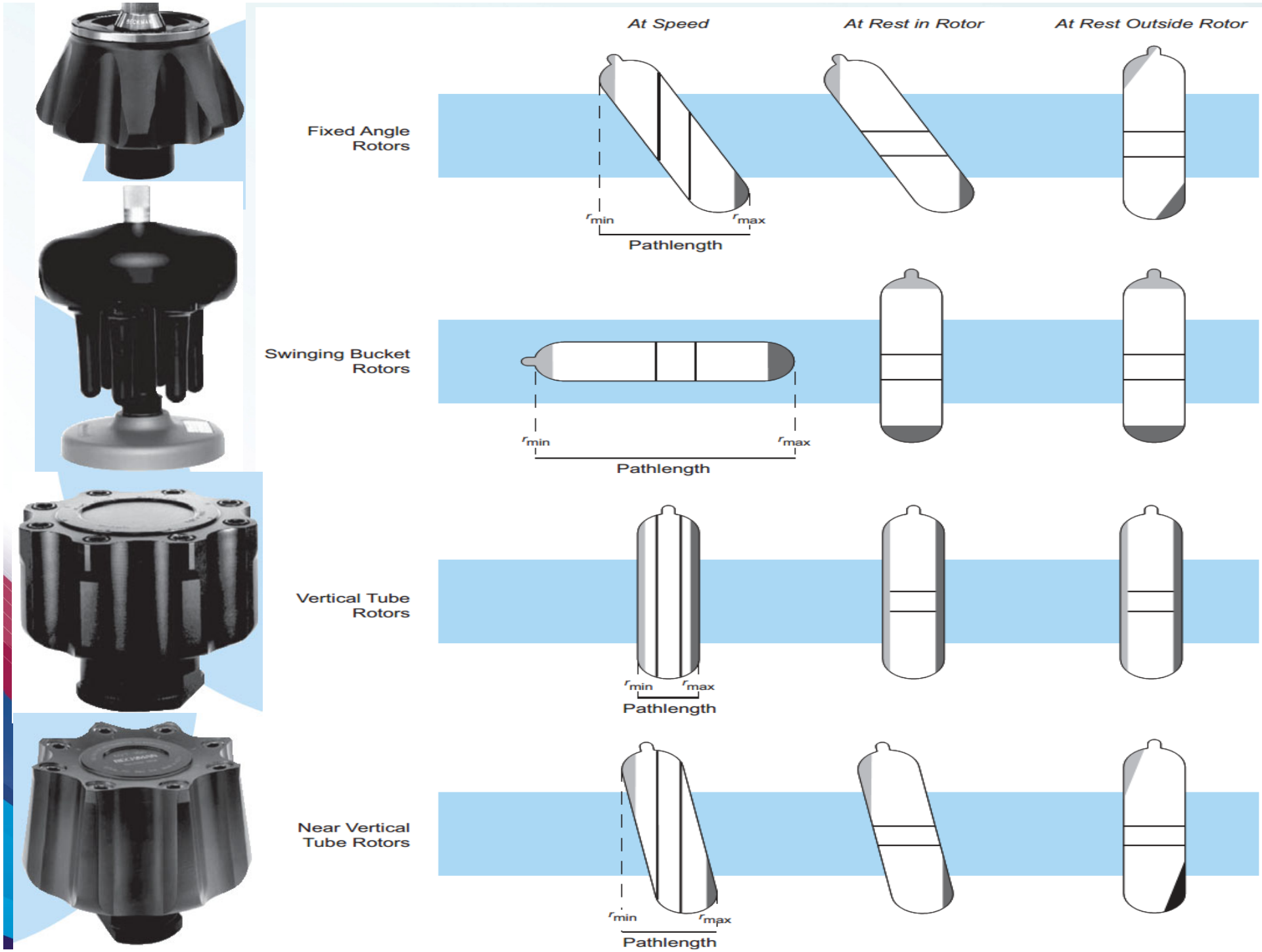
At Speed
At Rest in Rotor
At Rest Outside Rotor
Fixed Angle Rotors
rmin
rmax
Pathlength
Swinging Bucket Rotors
rmin
rmax
Pathlength
Vertical Tube Rotors
rmin
rmax
Pathlength
Near Vertical Tube Rotors
rmin
rmax
Pathlength

Fixed Angle Rotor

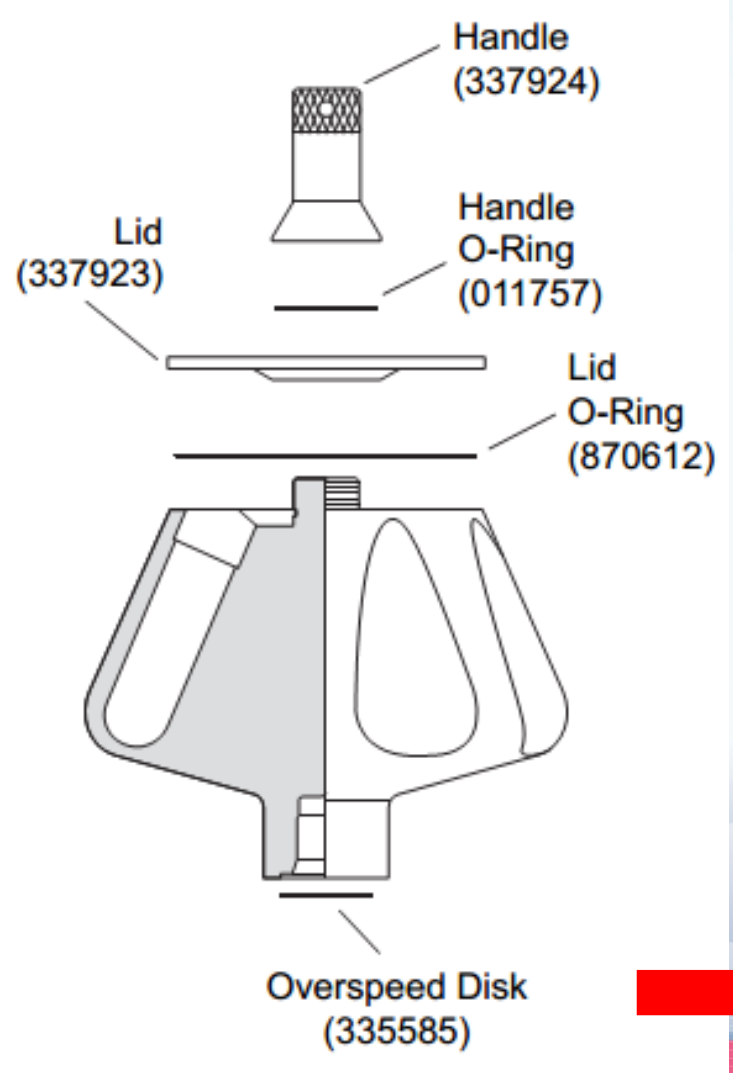

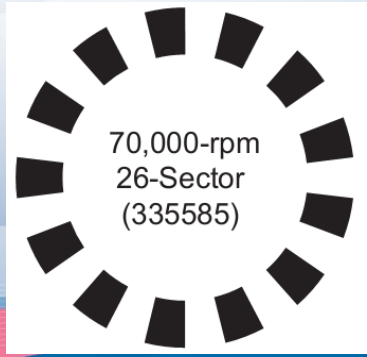

Swinging bucket rotor

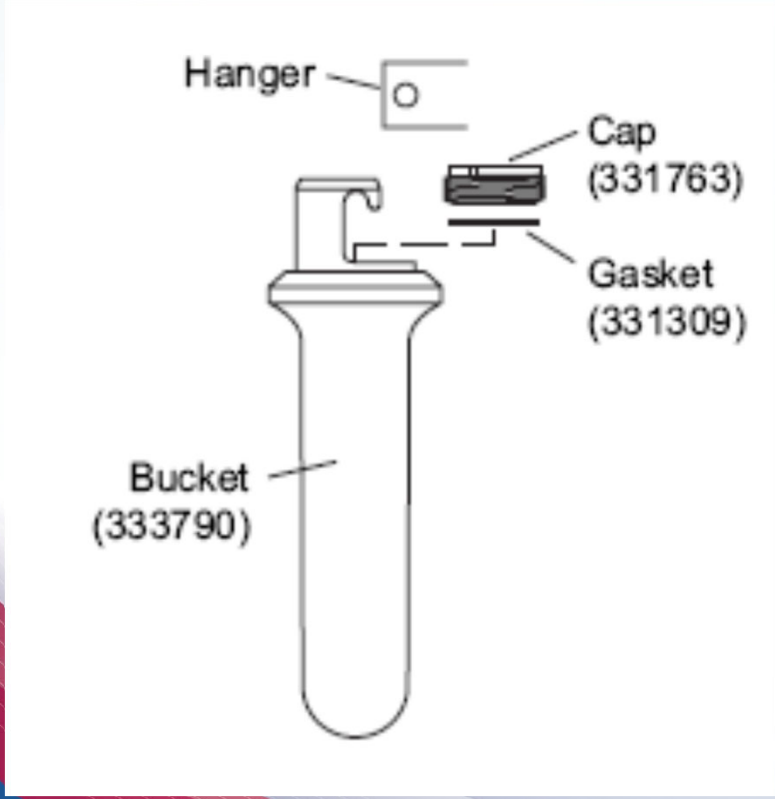

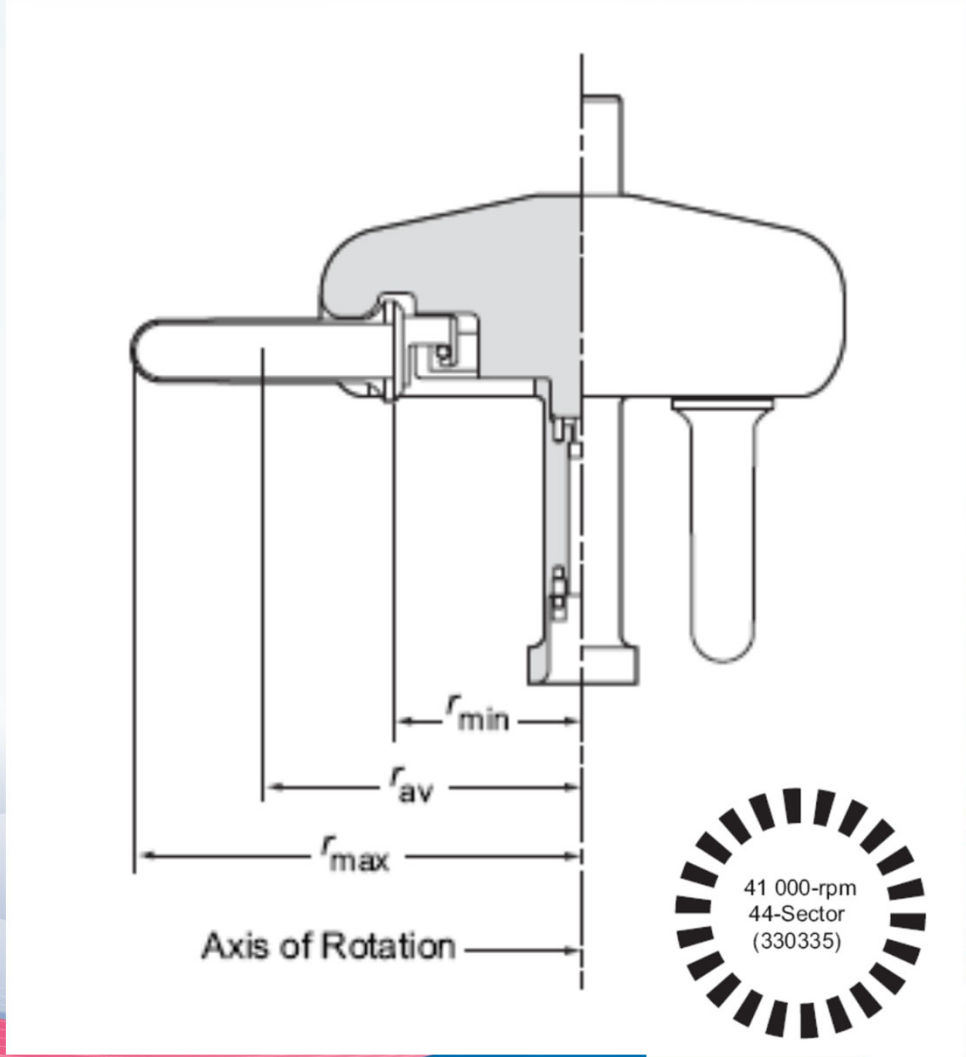

每組Bucket配件
請對照編號

Type 70Ti

SPECIFICATIONS

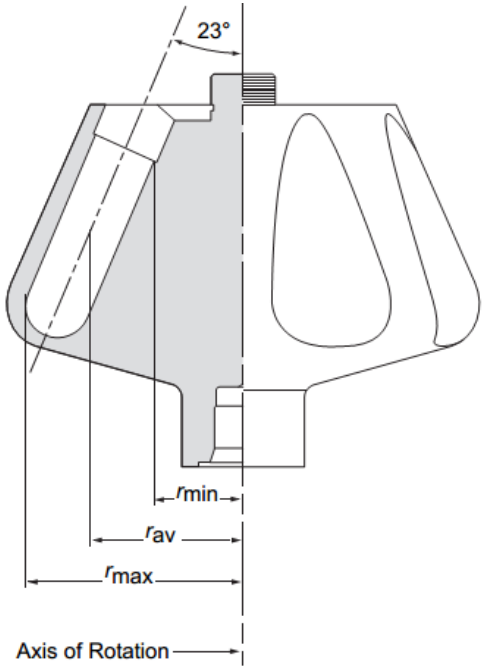

Maximum speed	70 000 rpm
Density rating at maximum speed	1.2 g/mL
Relative Centrifugal Field* at maximum speed	
At r_{max} (91.9 mm)	504 000 × *g*
At r_{av} (65.7 mm)	361 000 × *g*
At r_{min} (39.5 mm)	217 000 × *g*
k factor at maximum speed	44
Conditions requiring speed reductions	see RUN SPEEDS
Number of tube cavities	8
Available tubes	see Table 1
Nominal tube dimensions (largest tube)	25 × 89 mm
Nominal tube capacity (largest tube)	39 mL
Nominal rotor capacity	312 mL
Approximate acceleration time to maximum speed (fully loaded)	8 1/2 min
Approximate deceleration time from maximum speed (fully loaded)	7 min
Weight of fully loaded rotor	9 kg (20 lb)
Rotor material	titanium

Note

- Sample Density:避免離心管破損，樣本密度需在**1.2g/ml以下**

$$\text{reduced maximum speed} = (70\ 000\ \text{rpm})\sqrt{\frac{1.2\ \text{g/mL}}{\rho}}$$

- K Factors : Rotors Ex-change Time

$$\frac{t_a}{t_b} = \frac{k_a}{k_b}$$

BECKMAN COULTER
We're better together

Customer FiRST 2011

Table 1. Available Tubes and Bottles for the Type 70 Ti Rotor. Use only the items listed here.

Tube				Required Accessory		Max Speed/ RCF/ *k* Factor
Dimensions	Description	Part Number	Max Fill Vol	Description	Part Number	
25 × 89 mm	Quick-Seal Ultra-Clear	344326 (pkg/50)	39 mL	red aluminum spacer	342699	70 000 rpm 504 000 × *g* 44
25 × 89 mm	Quick-Seal polyallomer	342414 (pkg/50)	39 mL	red aluminum spacer	342699	70 000 rpm 504 000 × *g* 44
25 × 89 mm	Ultra-Clear	344058 (pkg/50)	38.5 mL[a]	red aluminum cap	331151	60 000 rpm 371 000 × *g* 59
25 × 89 mm	thinwall polyallomer	326823 (pkg/50)	38.5 mL[a]	red aluminum cap	331151	60 000 rpm 371 000 × *g* 59
25 × 89 mm	stainless steel	301112	38.5 mL	aluminum cap	302133	40 000 rpm[b] 165 000 × *g* 135

Tube 使用注意事項

- 型態
- 材質
- 樣品化學性質
- 承裝容量
- 滅菌方式
- 外觀檢視

BECKMAN COULTER
We're better together

Customer FiRST 2011

Tube Type

OptiSeal™ Tubes

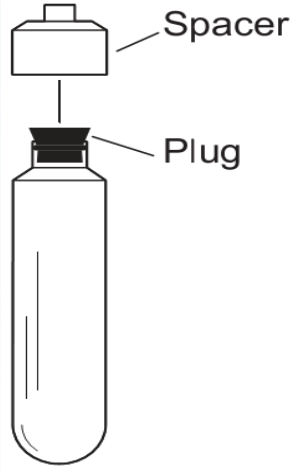

Quick-Seal® Tubes

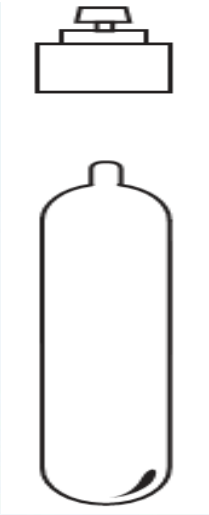

Thinwall Tubes

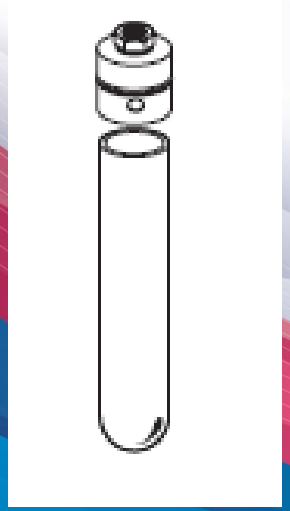

Bottles

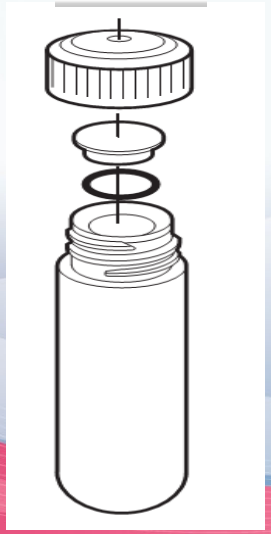

Thickwall Tubes

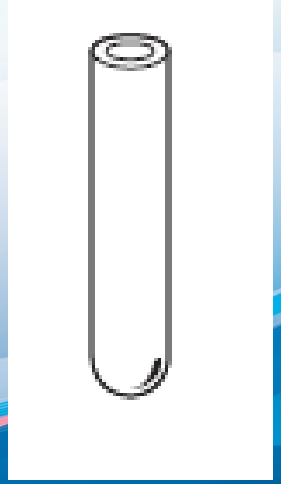

BECKMAN COULTER
We're better together

Customer FiRST 2011

Tube 使用注意事項

- 型態
- 材質
- 樣品化學性質
- 承裝容量
- 滅菌方式
- 外觀檢視

BECKMAN COULTER
We're better together

Customer FiRST 2011

Tube Material

1. PA (Polyallomer) ：軟材質/半透明/可高壓滅菌/可耐醇類、DMSO與部分有機溶劑
2. PC (Polycarbonate) ：硬材質/透明
3. PP (Polypropylene)：半透明/耐酸鹼/耐醇類
4. PE (Polyethylene)：透明/半透明/耐酸鹼
5. Ultra-clear：超透明薄壁/可穿透/不可高壓滅菌/不耐醇類、 DMSO與有機溶劑

Tube 使用注意事項

- 型態
- 材質
- 樣品化學性質
- 承裝容量
- 滅菌方式
- 外觀檢視

Table 2.1 Characteristics and Chemical Resistances of Tube and Bottle Materials[a]

Tube or Bottle Type	Optical Property	Puncturable	Sliceable	Reusable	Acids (dilute or weak)	Acids (strong)	Alcohols (aliphatic)	Aldehydes	Bases	Esters	Hydrocarbons (aliphatic)	Hydrocarbons (aromatic and halogenated)	Ketones	Oxidizing Agents (strong)	Salts
thinwall polyallomer	transparent	yes	yes	no	S	U	U	M	S	U	U	U	U	U	S
thickwall polyallomer	translucent	no	no[b]	yes	S	S	S	M	S	M	M	U	M	U	S
Ultra-Clear	transparent	yes	yes	no	S	U	U	S	U	U	U	U	U	U	M
polycarbonate	transparent	no	no	yes	M	U	U	M	U	U	U	U	U	M	M
polypropylene	translucent/ transparent	no	no[b]	yes	S	S	S	M	S	M	S	M	M	M	S
polyethylene	transparent/ translucent	yes	no	yes	S	S	S	S	S	S	U	M	M	M	S
cellulose propionate	transparent	no	no[b]	no	S	U	U	U	U	M	S	S	U	M	S
stainless steel	opaque	no	no	yes	S	U	S	S	M	S	S	S	M	S	M

S = satisfactory resistance M = marginal resistance U = unsatisfactory resistance

a. Refer to Appendix A for information about specific solutions.

b. Polyallomer, polypropylene, and cellulose propionate tubes with diameters of 5 to 13 mm may be sliced using the Centritube Slicer (part number 347960) and appropriate adapter plate.

Tube 使用注意事項

- 型態
- 材質
- 樣品化學性質
- 承裝容量
- 滅菌方式
- 外觀檢視

BECKMAN COULTER
We're better together

Customer FiRST 2011

Table 3.1 General Filling and Sealing Requirements for Tubes and Bottles

Tube or Bottle	Filling Level Requirements		
	Swinging Bucket Rotors	Fixed Angle Rotors	Vertical Tube Rotors
Polyallomer			
thinwall tubes	within 2 to 3 mm of top	full with cap	not used
thickwall tubes	at least 1/2 full	1/2 full to max capless level or full with cap	not used
Quick-Seal tubes	full and heat sealed	full and heat sealed	full and heat sealed
bottles	min to max (see rotor manual) with screw-on cap or cap assembly	1/2 full to max (see rotor manual) with screw-on cap or cap assembly	not used
Ultra-Clear			
open-top tubes	within 2 to 3 mm of top	full with cap	not used
Quick-Seal tubes	not used	full and heat sealed	full and heat sealed
Polycarbonate			
thickwall tubes	at least 1/2 full	1/2 full to max capless level or full with cap	not used
bottles	at least 1/2 full	min to max (see rotor manual) with screw-on cap or cap assembly	not used
Stainless Steel			
tubes	any level	any level with cap or cap assembly	not used
Polypropylene			
tubes and bottles	at least 1/2 full	1/2 full to max capless level or full with cap or cap assembly	not used
Polyethylene			
tubes	at least 1/2 full	1/2 full to max capless level or full with cap	not used
Cellulose Propionate			
tubes and bottles	at least 1/2 full	1/2 full to max capless level	not used

Open Top

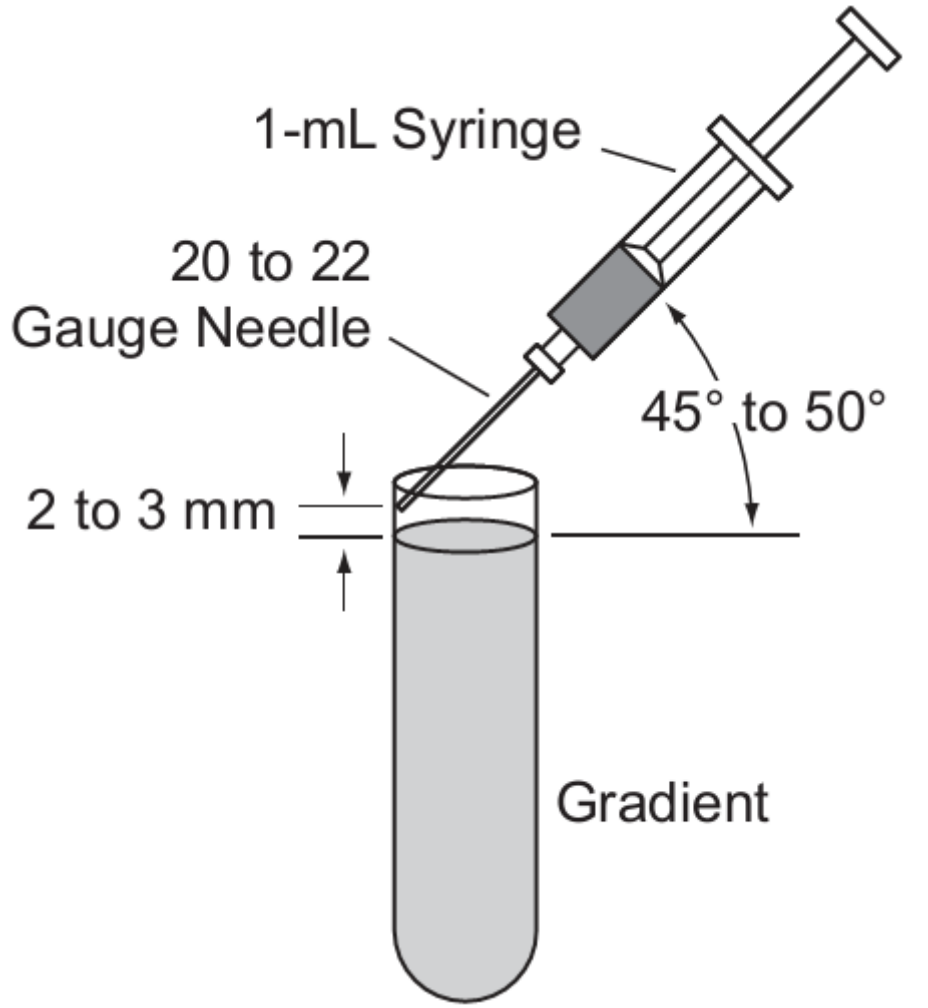

Figure 3.1 Filling OptiSeal Tubes*

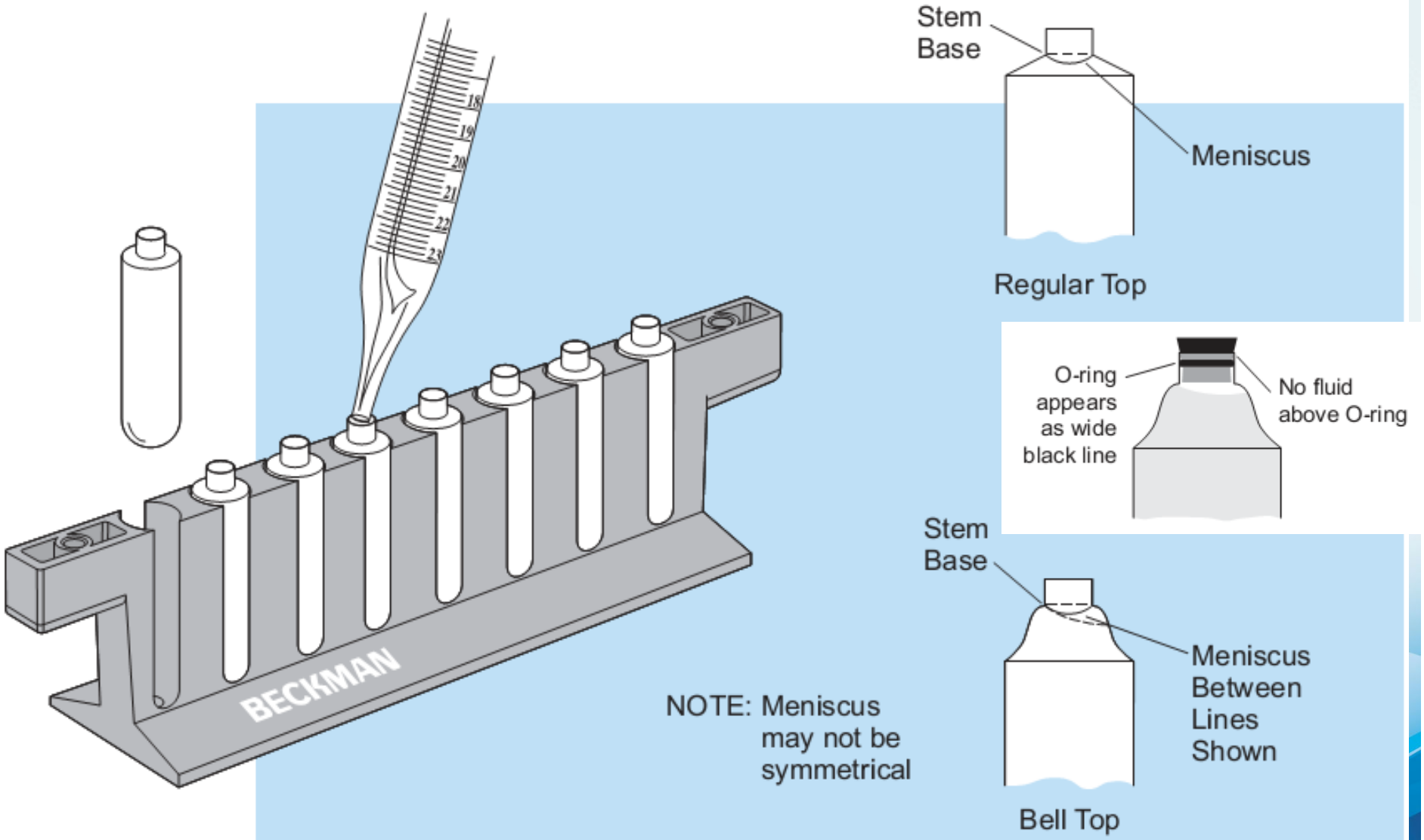

Tube 使用注意事項

- 型態
- 材質
- 樣品化學性質
- 承裝容量
- 滅菌方式
- 外觀檢視

BECKMAN COULTER
We're better together

Customer FiRST 2011

Table 7.1 Tube and Bottle Sterilization and Disinfection[a]

Tube/Bottle Material	Autoclave[b] (121°C)	UV Irradiation	Ethylene Oxide	Formal-dehyde	Ethanol (70%)[c]	Sodium Hypo-chlorite (10%)	Hydrogen Peroxide (10%)	Glutaral-dehyde (2%)	Phenolic Deriva-tives
polyallomer	yes	no	yes	yes	yes	yes	yes	yes	no
Ultra-Clear	no	no	yes	yes[d]	yes	yes	yes	yes	no
polycarbonate	yes[e]	no	yes	yes[d]	no	yes[f]	yes	yes	no
polypropylene	yes	no	yes	yes	yes	yes[g]	yes[h]	yes	no
polyethylene	no	no	yes	yes	ye[i]s	yes	yes	yes	yes
cellulose propionate	no	no	no	no	no	yes	yes	yes	no
stainless steel	yes	yes	yes	yes	yes[j]	no	yes	yes	no

a. This information is provided as a guide to the use of sterilization and disinfection techniques for tube materials. Cold sterilization results shown are for short-duration (10-minute) soak periods; reactions may differ with extended contact. Refer to Appendix A of this manual for information about specific solutions.

b. To avoid deformation, autoclave tubes or bottles open-end down in a tube rack at 15 psig for no more than 20 minutes (allow to cool before removing from tube rack). DO NOT autoclave capped or sealed tubes or bottles.

c. Flammable; do not use in or near operating centrifuges.

d. Do not use if there is methanol in the formula.

e. Tube life will be reduced by autoclaving.

f. Discoloration may occur.

g. Can be used if diluted.

h. Below 26°C only.

i. Below 21°C only.

Autoclaveable :
121°C,20 min,15 psi

Tube 使用注意事項

- 型態
- 材質
- 樣品化學性質
- 承裝容量
- 滅菌方式
- 外觀檢視

BECKMAN COULTER
We're better together

Customer FiRST 2011

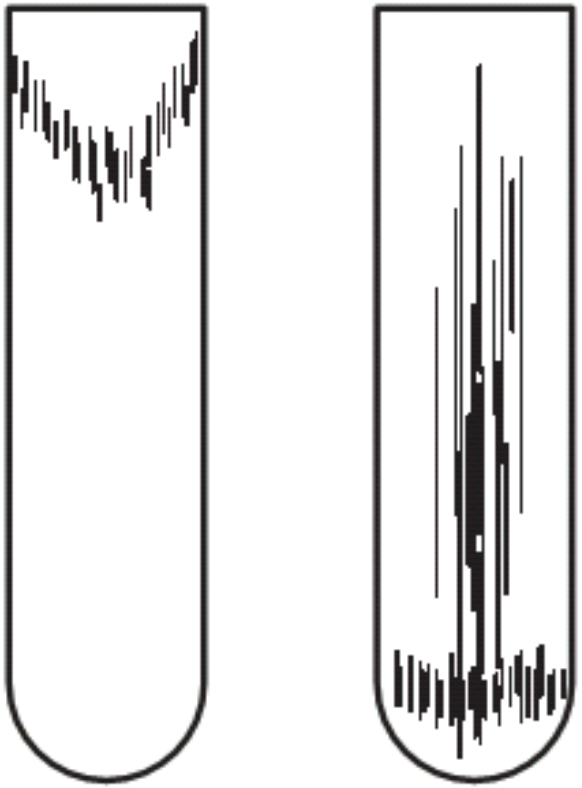

Crazing

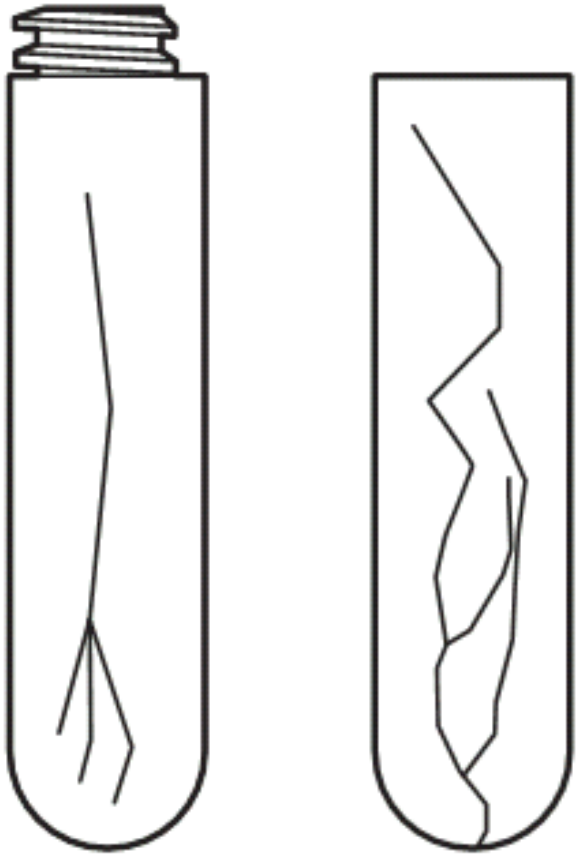

Cracking

Balance

- Rotor Sample 平衡步驟：

1. 平衡對稱放置

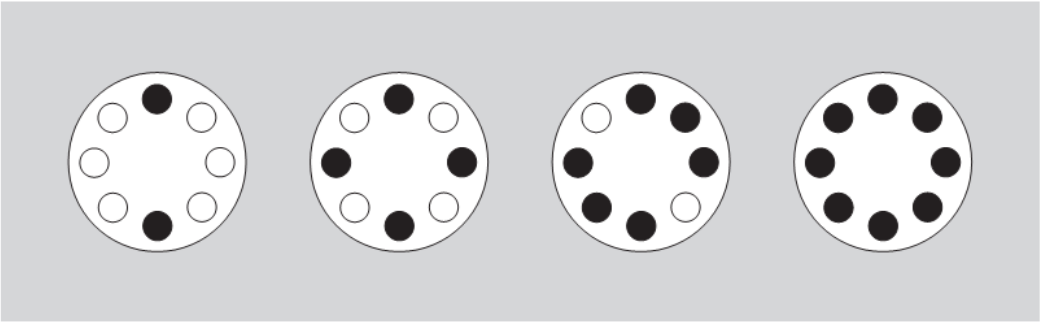

2. 重量平衡：Opposing tubes must be filled to the same level with liquid of the same density.

   ＜建議平衡至 mg level＞

- Swinging Rotor的**Bucket**一定要6個全數掛上

基本保養
Maintenance

- 保持離心機槽內清潔
- Rotor 使用後,用軟毛刷與水清洗後倒放晾乾
- Rotor之O-ring需定期清潔和塗抹vacuum grease（請戴手套使用）
- Rotor Lid桿柄之螺紋處需定期清潔和塗抹spinkote lubricant（請戴手套使用）
- Rotor Over-speed Disk需保持清潔，避免刮傷

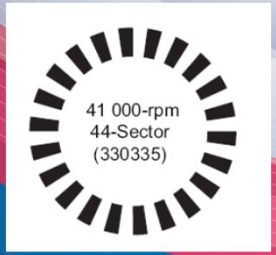

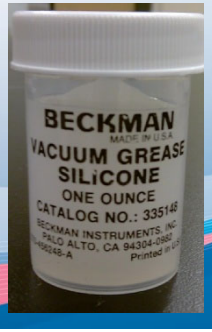

Thanks

BECKMAN COULTER
We're better together

Customer FiRST 2011